Axial Piston High Pressure Pump For Seawater

HPS 0.6~1.0

THINKTANK







Specification - HPS 0.6~1.0

Pumps Model	0.6	0.8	1.0
Code Number	TT010200201	TT010200202	TT010200203
Displacement (cc/rev)	4.07	5.08	6.3
Housing Material	2205	2205	2205
Min. Outlet Pressure（barg ）	20	20	20
Max. Outlet Pressure (barg)	85	85	85
Inlet Pressure Continuous (barg)	0.5-5	0.5-5	0.5-5
Min. Speed,Continuous (rpm)	700	700	700
Max. Speed * (rpm)	3500	3500	3500
Flow Rate (m^3/H) (85barg,700 rpm)	0.12	0.17	0.22
Flow Rate (m^3/H) (85barg,1000 rpm)	0.22	0.29	0.36
Flow Rate (m^3/H) (85barg,1200 rpm)	0.25	0.33	0.42
Flow Rate (m^3/H) (85barg,1500 rpm)	0.34	0.43	0.54
Flow Rate (m^3/H) (85barg,1800 rpm)	0.40	0.52	0.65
Flow Rate (m^3/H) (85barg,2500 rpm)	0.58	0.75	0.94
Flow Rate (m^3/H) (85barg,3000 rpm)	0.71	0.91	1.14
Flow Rate (m^3/H) (85barg,3500 rpm)	0.83	1.06	1.32
Calculation Factor (at maximum speed)	496	509	512
Motor Selection (KW) (Maximum pressure, maximum speed)	2.2	3.0	4.0
Media Temperature (°C)	2~50	2~50	2~50
Sound Pressure Level (dB) **	74	74	74
Weight (kg)	3.6	3.6	3.6
Integrated Flush Valve	YES	YES	YES

* At maximum speed, the inlet pressure must be at least 2 barg;
** Sound Pressure Level: Calculated according to EN ISO 3744: 2010 / dB(A) [LPA, 1m], when driven by a motor and operating at maximum working pressure and speed.

Installation Dimensions (HPS 0.6~1.0)

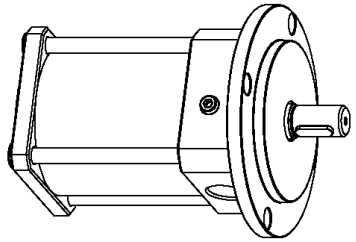

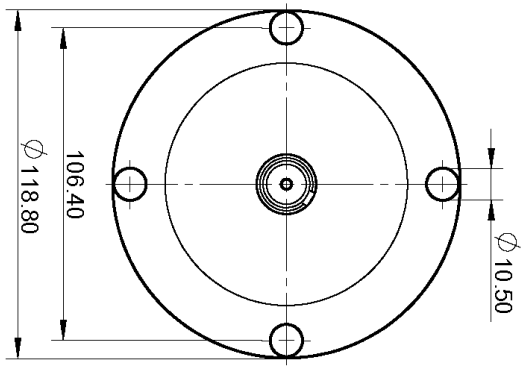

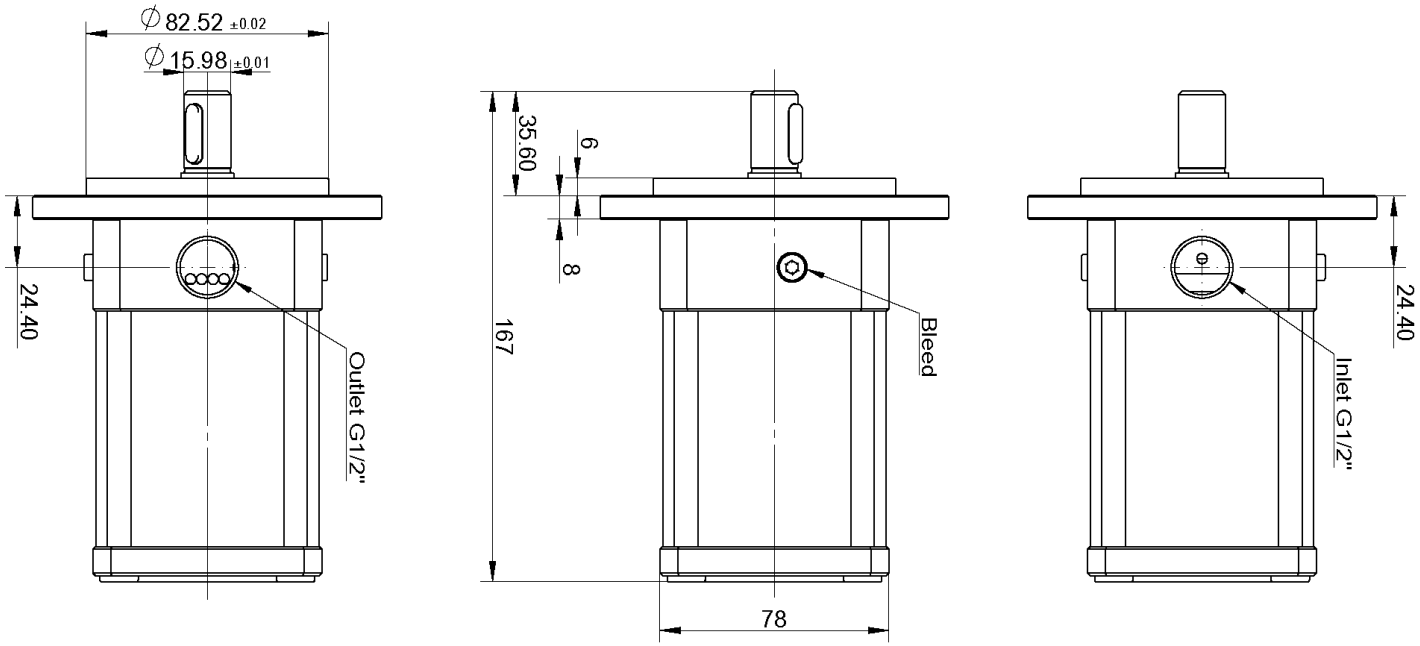

Parallel Key	**5*5*20（DIN6885）**
Bleed	**M5*8**
Inlet Port	**G 1/2”（T Port）**
Outlet Port	**G 1/4”（P Port）**

HPS 0.6~1.0 Typical Flow Curve at Maximum Pressure

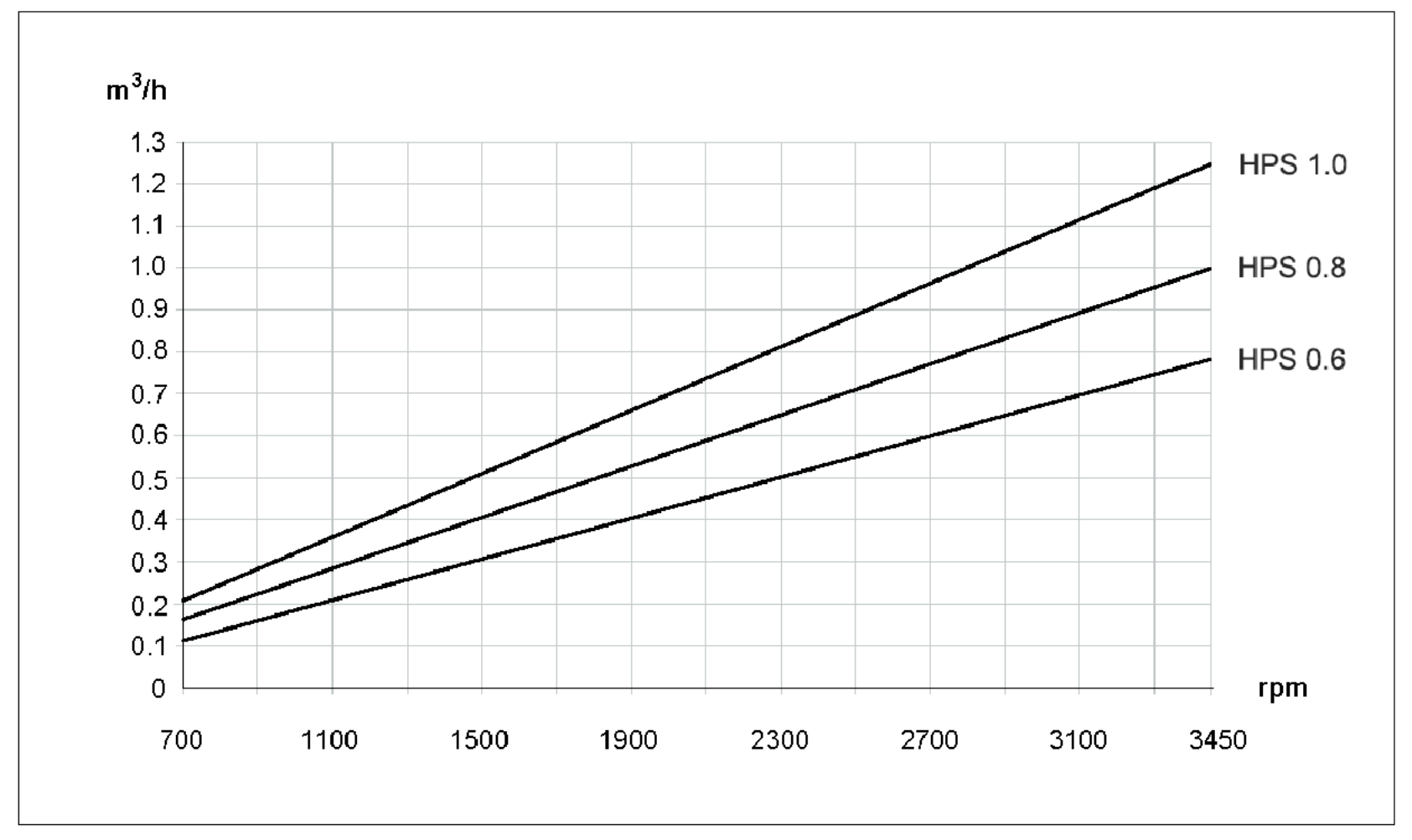

HPS 0.6~1.0 Motor Power Curve
Different Pressures at Maximum Speed

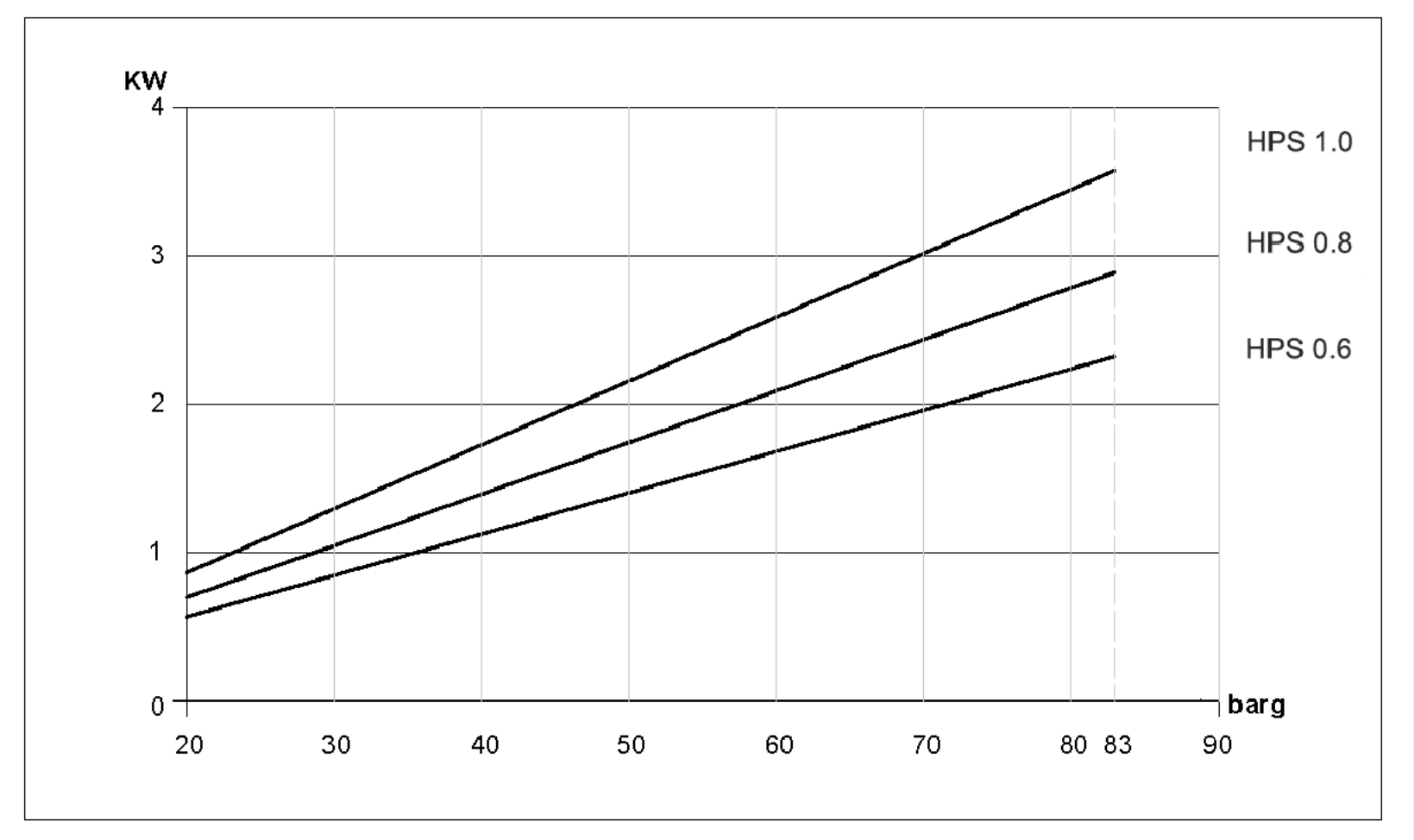

Drawing - HPS 0.6~1.0

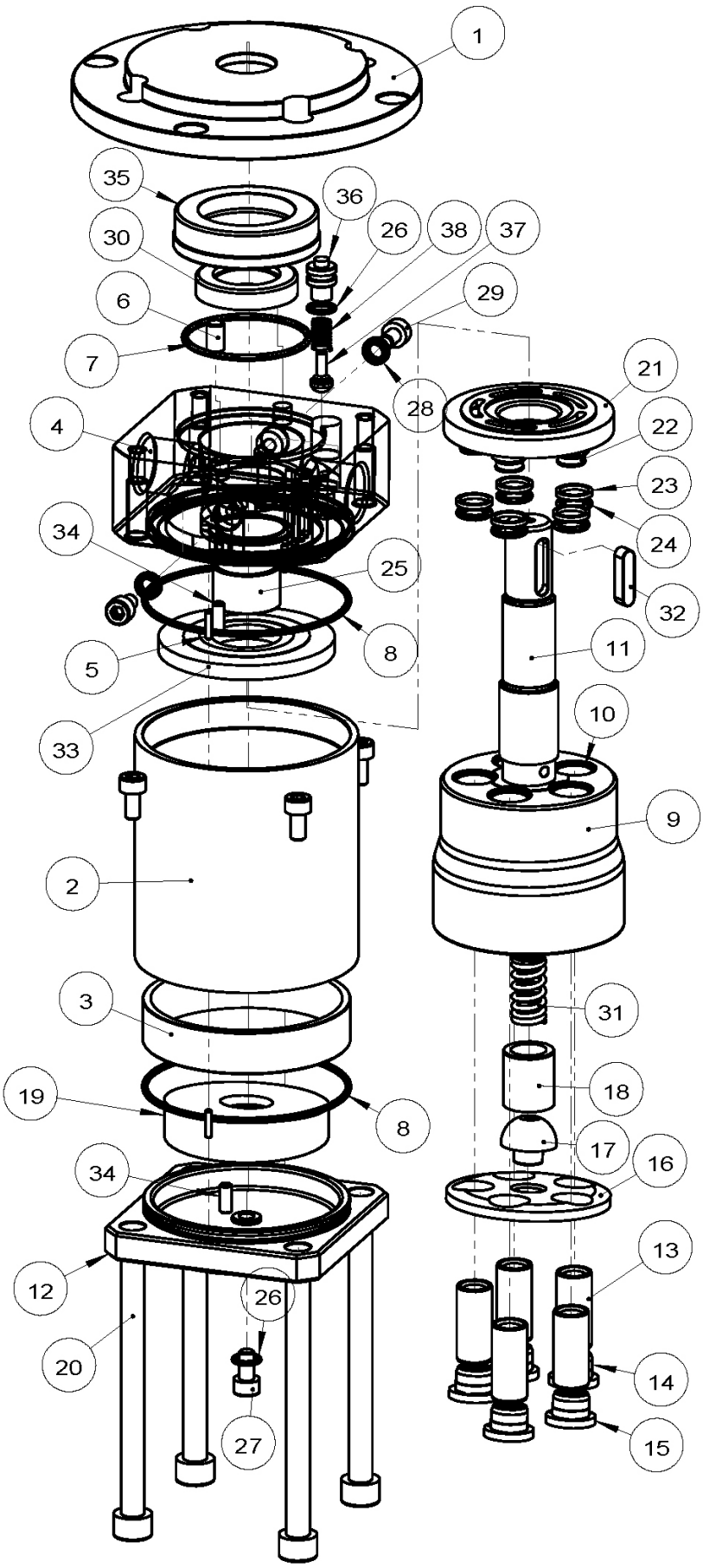

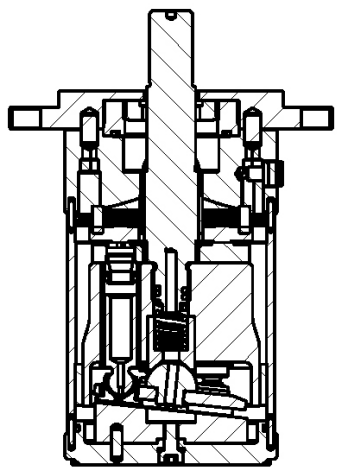

No.	Parts	Material	Qty
1	Mounting Flange	2205	1
2	Housing	2205	1
3	Main Bearing	PEEK	1
4	Interface Flange	2507	1
5	Round Pin	316L	4
6	Round Pin	316L	2
7	O-Ring	NBR	1
8	O-Ring	NBR	2
9	Piston Cylinder	2507	1
10	Piston Bushing	PEEK	5
11	Main Shaft	2507	1
12	Bottom Cover	2205	1
13	Piston	2507	5
14	Slipper	2507	5
15	Slipper - Peek	PEEK	5
16	Return Plate	2507	1
17	Ball Joint	2507	1
18	Ball Joint Block	PEEK	1
19	Swash Plate	2507	2
20	Internal Hexagon Screw M8-20	2507	4
21	Valve Plate	2507	1
22	Valve Plate Guide Sleeve	2507	5
23	Guide Seal Ring	PTFE	1
24	O-Ring	NBR	5
25	Main Shaft Bearing	PEEK	1
26	O-Ring	NBR	2
27	Internal Hexagon Screw M5-10	316L	5
28	M5 Combined Gasket	AISI 304	2
29	Internal Hexagon Screw M5-08	316L	2
30	Mechanical Seal 560A-18	316+NBR	1
31	Spring	2507	1
32	Flat Key 5-5-20	316L	1
33	Distribution Plate	304+PEEK	1
34	Round Pin	PEEK	3
35	Mechanical Seal Seat	PTFE	1
36	Single Valve End Cap	2205	1
37	Single Valve Core	PEEK	1
38	Spring	2507	1