Axial Piston
High Pressure Pump
For Tap Water

HPH **2.0~6.3**

THINKTANK







Specification 2.0~6.3

Pumps Model	2.0	3.2	4.0	6.3
Displacement (cc/rev)	2	3.2	4	6.3
Housing Material	ASTM 304 / ASTM 316L			
Min. Outlet Pressure (barg)	30	30	30	30
Max. Outlet Pressure (barg)	140	140	140	140
Inlet Pressure,Continuous (barg)	0-4	0-4	0-4	0-4
Min. Speed,Continuous (rpm)	700	700	700	700
Max. Speed (rpm)	1800	1800	1800	1800
Flow Rate (L/min) (14Mpa,700 rpm)	0.3	1.3	1.9	3.7
Flow Rate (L/min) (14Mpa,1000 rpm)	1.0	2.3	3.2	5.6
Flow Rate (L/min) (14Mpa,1200 rpm)	1.5	2.9	3.7	6.8
Flow Rate (L/min) (14Mpa,1500 rpm)	2.0	3.9	5.2	8.7
Flow Rate (L/min) (14Mpa,1800 rpm)	2.6	4.9	6.4	10.5
Power Consumption (KW) (14Mpa,1500 rpm)	0.9	1.4	1.7	2.6
Min. Media Temperature (°C)	2	2	2	2
Max. Media Temperature(°C)	50	50	50	50
Sound Pressure Level (dB) *	76	76	76	76
Weight (kg)	4.5	4.5	4.5	4.5
Integrated Flush Valve	NO			

* Sound Pressure Level: Calculated according to EN ISO 3744: 2010 / dB(A) [LPA, 1m], when driven by a motor and operating at maximum working pressure and speed.

Installation Dimensions (HPH 2.0~6.3)

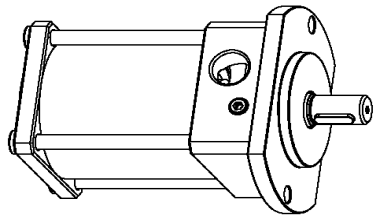

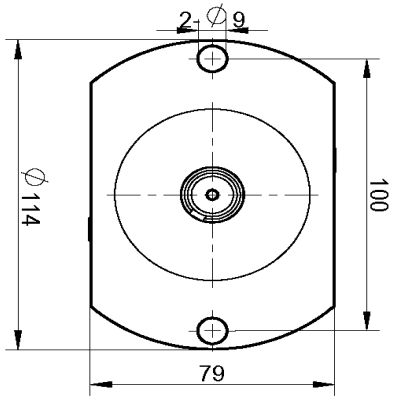

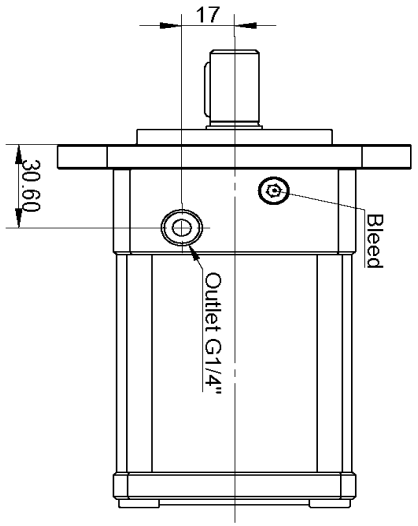

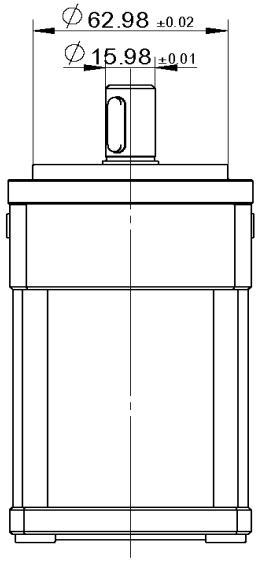

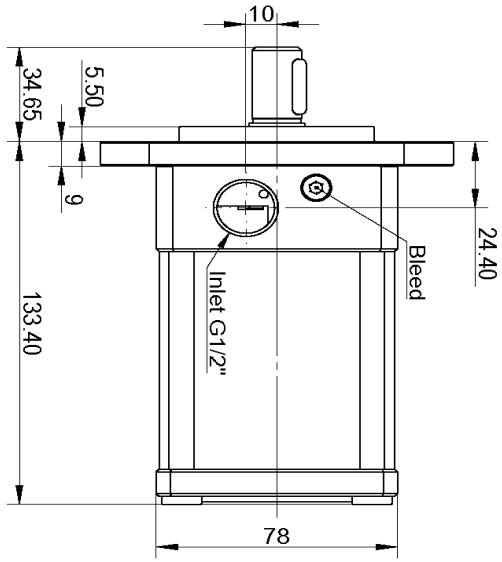

Parallel key	**5*5*20（DIN6885）**
Bleed	**M5*8**
Inlet Port	**G 1/2”（T Port）**
Outlet Port	**G 1/4”（P Port）**

HPH 2.0~6.3 Typical Flow Curve at Maximum Pressure

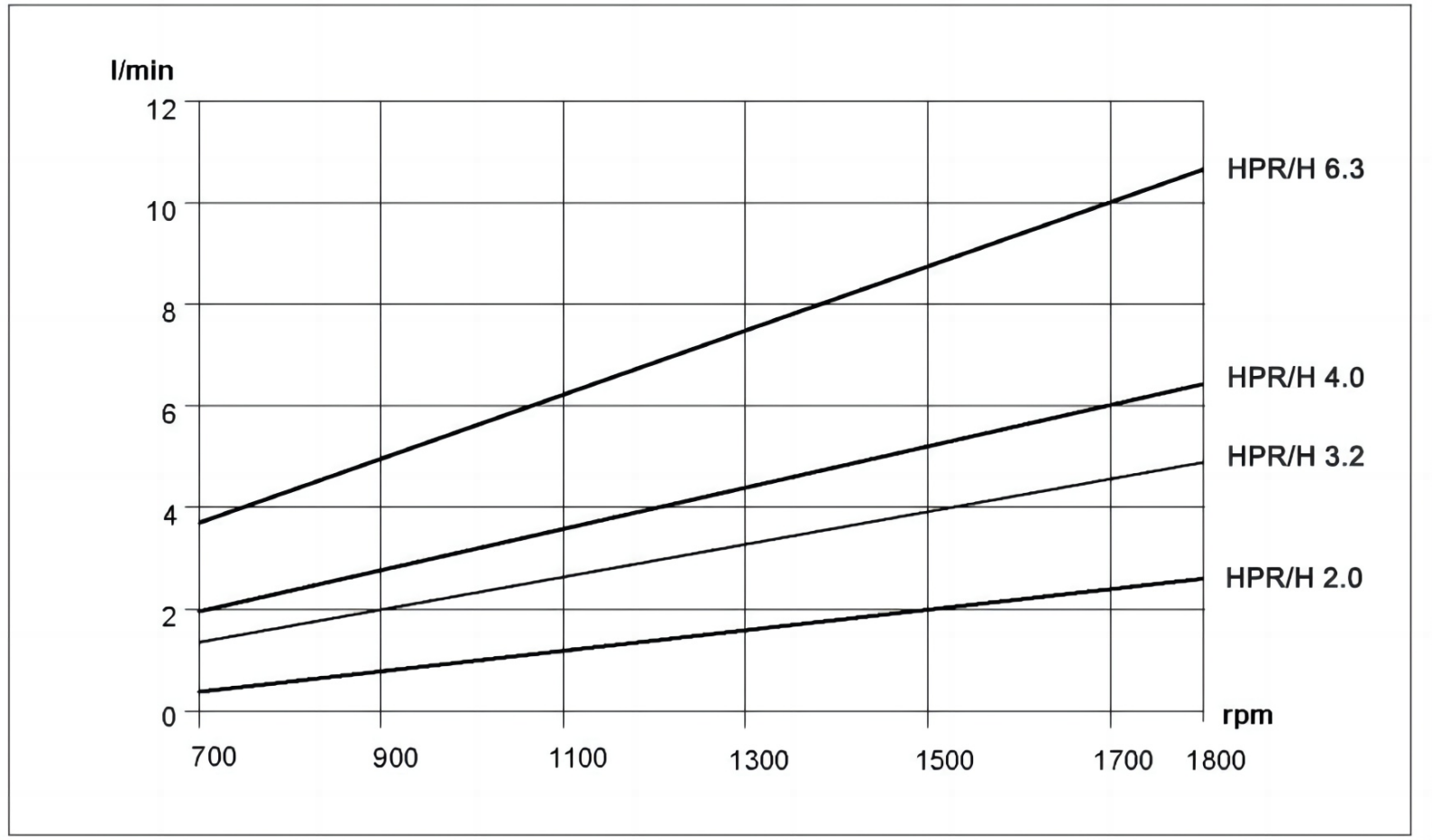

HPH 2.0~6.3 Motor Power Curve
Different Pressures at Maximum Speed

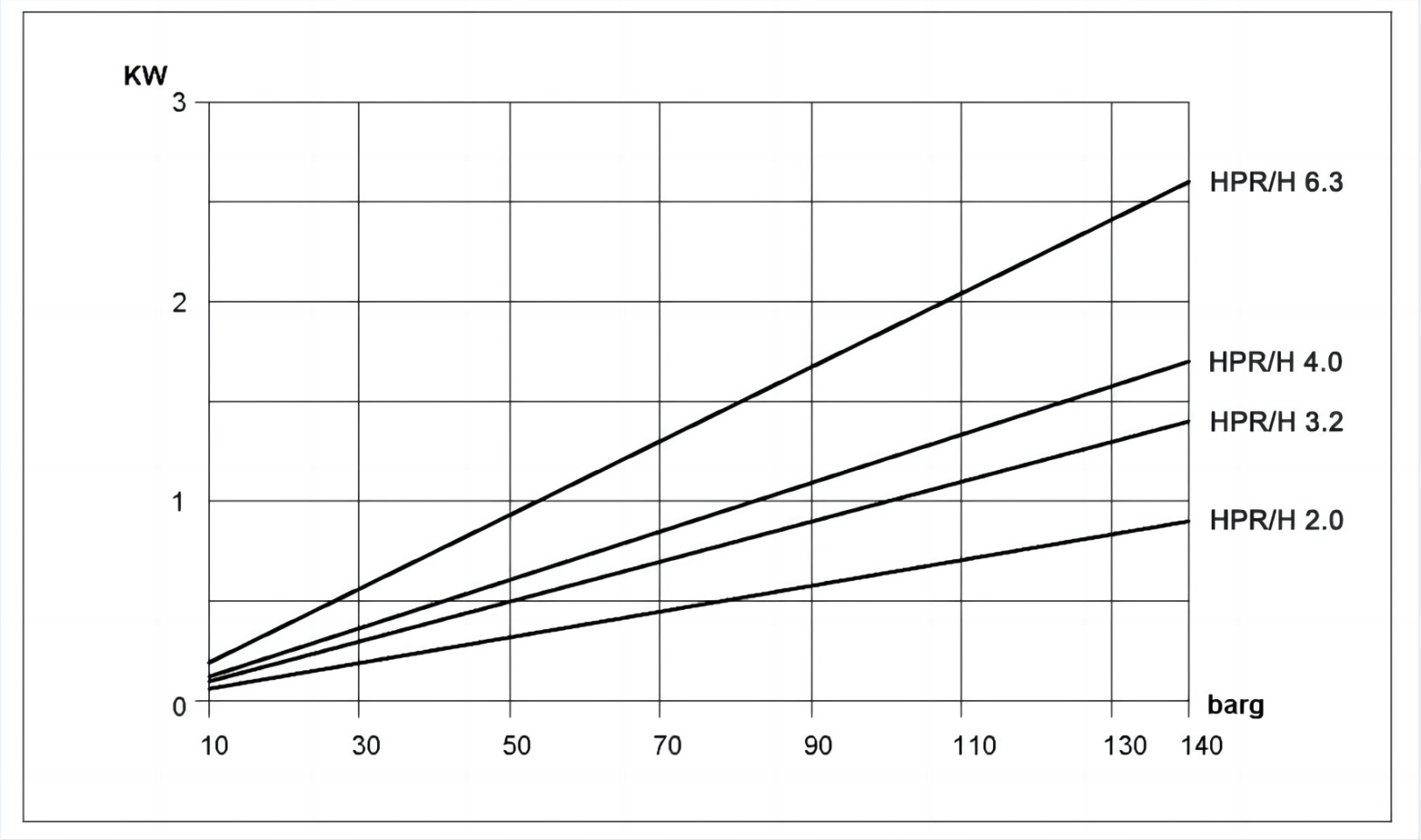

(▽▽)

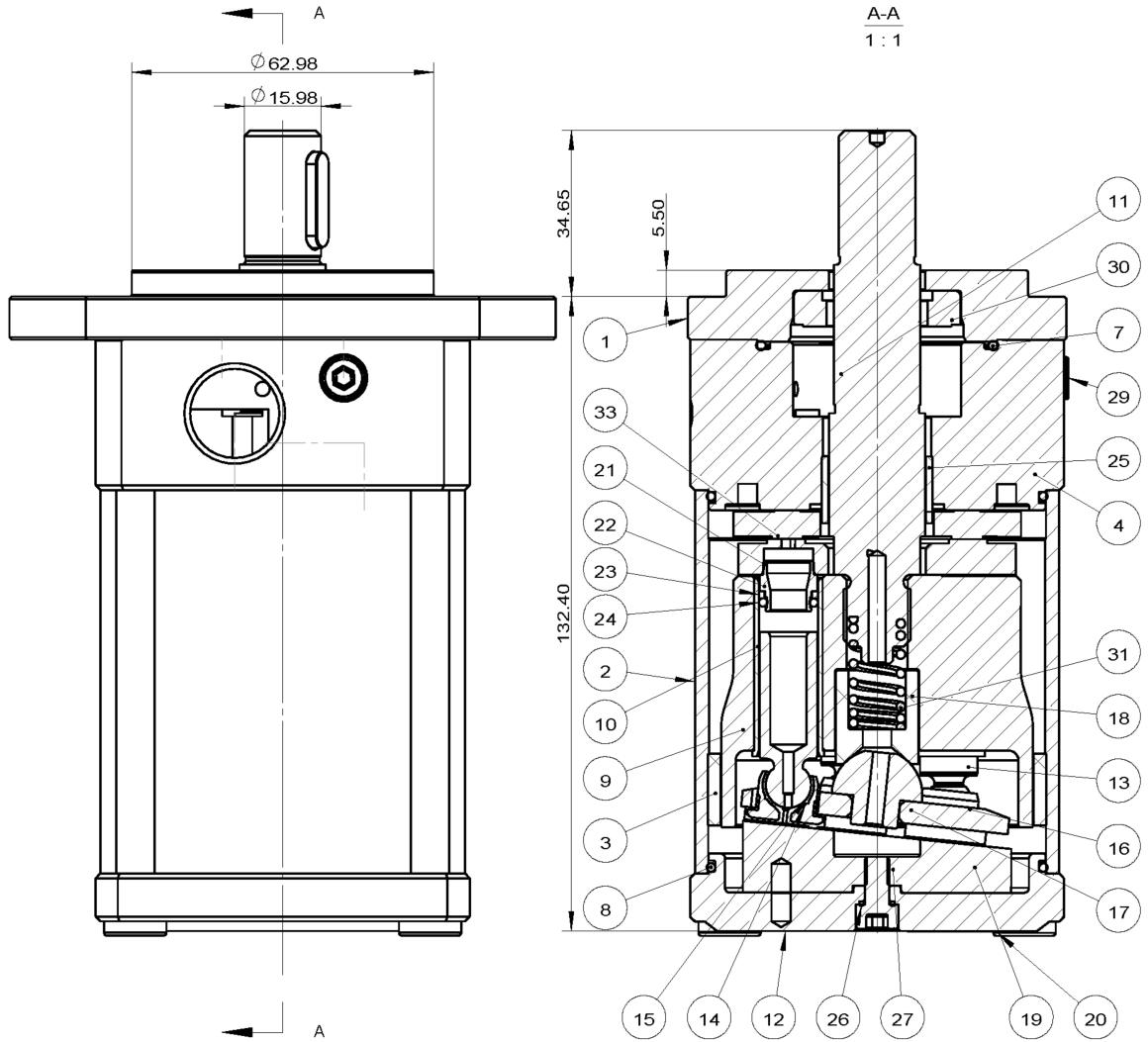

NO.	Parts	Material	Qty
33	Distribution Plate	304+PEEK	1
32	Flat Key	AISI 304	1
31	Spring	AISI 304	1
30	Mechanical Seal 560A-18	Ceramics	1
29	Hexagon Socket Bolts M5-08	AISI 304	2
28	M5 Combined Gasket	AISI 304	2
27	Hexagon Socket Bolts M5-10	AISI 304	1
26	O- Ring	NBR	1
25	Bearing For Main Shaft	PEEK	1
24	O- Ring	NBR	5
23	Retaining Ring For Guide Sleeve	PTFE	5
22	Guide Sleeve For Valve Plate	AISI 304	5
21	Valve Plate	AISI 304	1
20	Hexagon Socket Bolts M8-20	AISI 304	4
19	Swash Plate	630	1
18	Ball Joint Block	PEEK	1
17	Ball Joint	AISI 304	1
16	Return Disk	630	1
15	Slipper - Peek	PEEK	5
14	Slipper	AISI 304	5
13	Piston	630	5
12	Botttom Cover	AISI 304	1
11	Main Shaft	630	1
10	Piston Bushing	PEEK	5
9	Piston Cylinder	630	1
8	O-Ring	NBR	2
7	O-Ring	NBR	1
6	Cylindrical Pins	AISI 304	2
5	Cylindrical Pins	2205	4
4	Interface Flange	AISI 304	1
3	Large Bearings	PEEK	1
2	Housing	AISI 304	1
1	Mounted Flange	AISI 304	1

General Tolerances Not Stated For Machining			
>0.5~10	>10~30	>30~150	>150~500
±0.1	±0.2	±0.3	±0.5

	Name	Date
Design	Jackie Shih	May 9, 2022
Drawing	Leo Ma	Oct 12, 2022

Scale	View	Paper	Version
1:2		A3	

Axial Piston Type High Pressure Pump

Model: HPR/H 2.0~6.3

For Tap Water Conditon

SHANGHAI THINKTANK PROCESS MANAGEMENT CO., LTD

Exploded View 2.0~6.3

