Axial Piston
High Pressure Pump
For Tap Water

HPH **20~40**

THINKTANK







Specification 20~40

Pumps Model	20	25	32	40
Displacement (cc/rev)	20	25	32	40
Housing Material	ASTM 304 / ASTM 316L			
Min. Outlet Pressure (barg)	30			
Max. Outlet Pressure (barg)	160			
Inlet Pressure,Continuous (barg)	0.1-5			
Min. Speed,Continuous (rpm)	700			
Max. Speed (rpm)	3600	3600	3600	3000
Flow Rate (L/min) (16Mpa,700 rpm)	12.6	15.8	20.2	25.2
Flow Rate (L/min) (16Mpa,1000 rpm)	18.2	22.8	29.1	36.4
Flow Rate (L/min) (16Mpa,1500 rpm)	27.6	34.5	44.2	55.2
Flow Rate (L/min) (16Mpa,2000 rpm)	38.2	46.5	59.5	74.4
Flow Rate (L/min) (16Mpa,3000 rpm)	57.0	71.3	91.2	114
Power Consumption (KW) (16Mpa,1500 rpm)	8.5	10.6	13.6	17
Min. Media Temperature (°C)	2			
Max. Media Temperature (°C)	50			
Sound Pressure Level (dB) *	78	78	78	79
Weight (kg)	14.72	14.72	14.72	14.72
Integrated Flush Valve	YES			

* Sound Pressure Level: Calculated according to EN ISO 3744: 2010 / dB(A) [LPA, 1m], when driven by a motor and operating at maximum working pressure and speed.

Installation Dimensions (HPH 20~40)

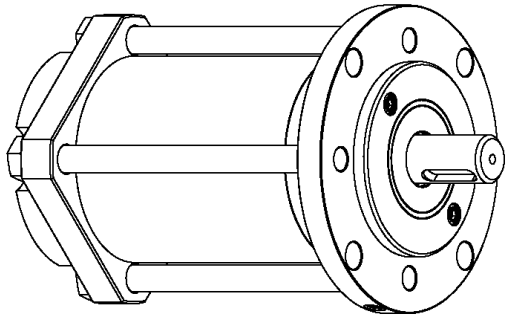

Parallel key	8*7*32（DIN6885）
Bleed	M6*10
Inlet Port	G 1-1/2”（T Port）
Outlet Port	G 3/4” （P Port）

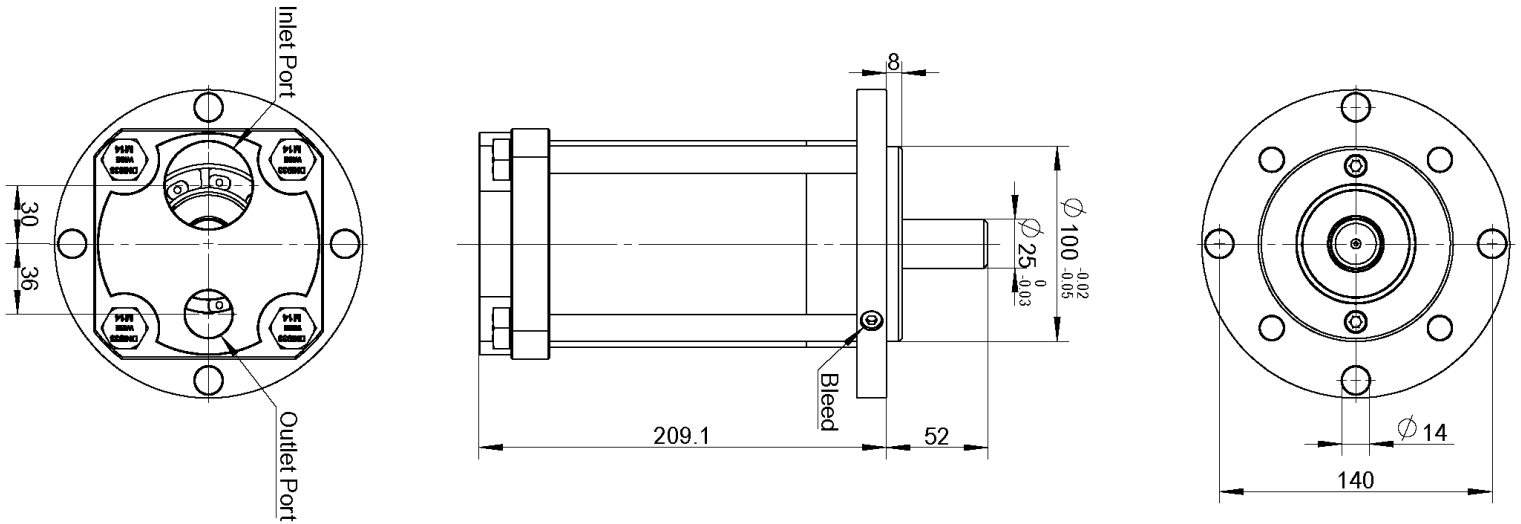

HPH 20~40 Flow Rate/Pressure Curve

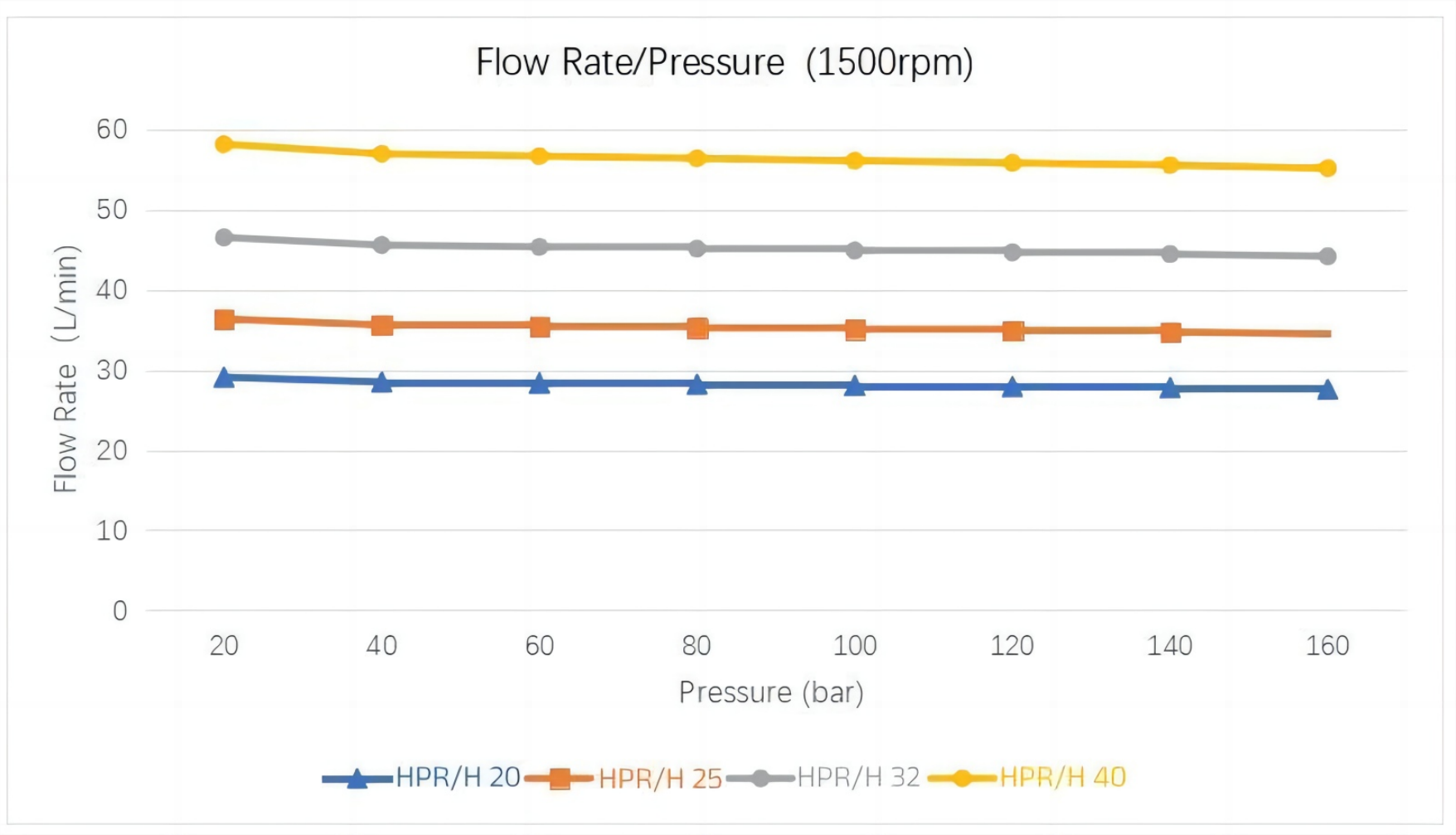

HPH 20~40 Flow Rate/Speed Curve

