Axial Piston
High Pressure Pump
For Tap Water

HPH **50~100**

THINKTANK







Specification 50~100

Pumps Model	50	65	71	81	100
Displacement (cc/rev)	50	65	71	81	100
Housing Material	ASTM 304 / ASTM 316L				
Min. Outlet Pressure (barg)	30				
Max. Outlet Pressure (barg)	160				
Inlet Pressure,Continuous (barg)	0.1-5				
Min. Speed,Continuous (rpm)	700				
Max. Speed (rpm)	2000	1800	1800	1800	1500
Flow Rate (L/min) (16Mpa,700 rpm)	32.6	42.3	46.2	52.7	65.1
Flow Rate (L/min) (16Mpa,1000 rpm)	46.5	60.5	66.0	75.3	93.0
Flow Rate (L/min) (16Mpa,1500 rpm)	71.3	92.6	101.2	115.4	142.5
Flow Rate (L/min) (16Mpa,2000 rpm)	95.0	-	-	-	-
Flow Rate (L/min) (16Mpa,3000 rpm)	-	-	-	-	-
Power Consumption (KW) (16Mpa,1500 rpm)	21.9	28.5	31.1	35.5	43.8
Min. Media Temperature (°C)	2				
Max. Media Temperature (°C)	50				
Sound Pressure Level (dB) *	80	80	80	80	80
Weight (kg)	24.8	24.8	24.8	24.8	24.8
Integrated Flush Valve	NO				

* Sound Pressure Level: Calculated according to EN ISO 3744: 2010 / dB(A) [LPA, 1m], when driven by a motor and operating at maximum working pressure and speed.

Installation Dimensions (HPH 50~100)

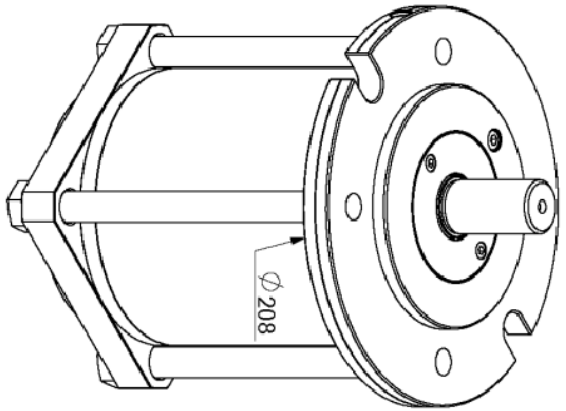

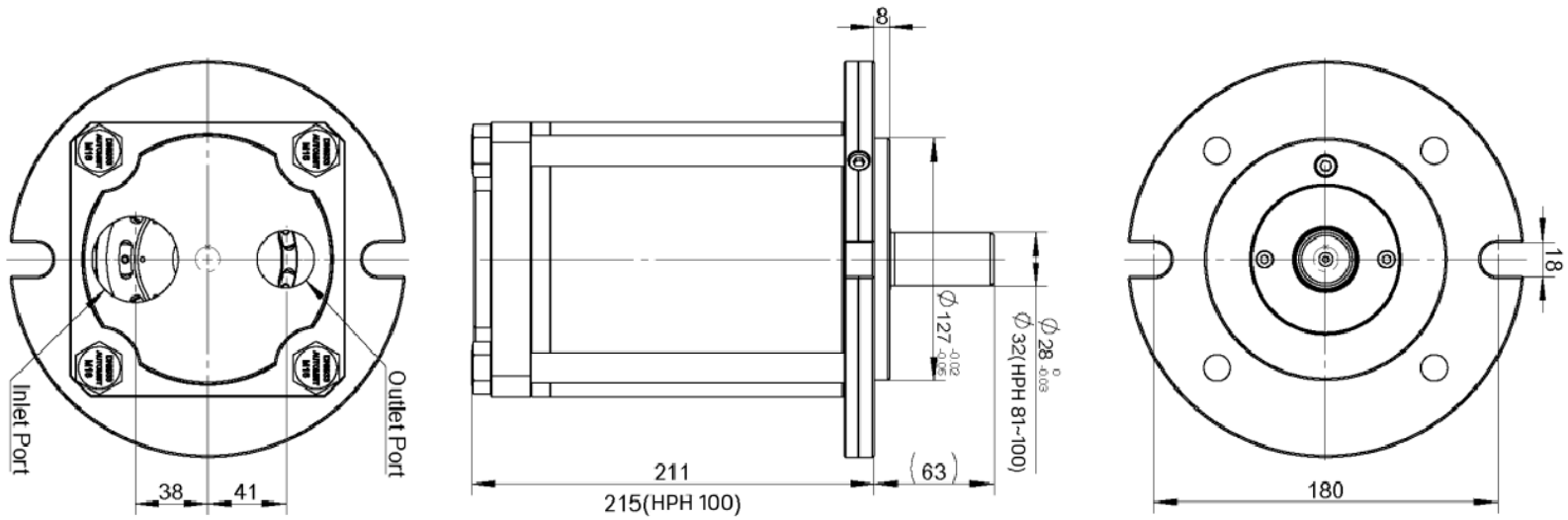

Parallel key	8*7*40（DIN6885）
Bleed	M6*10
Inlet Port	G 1-1/2”（T Port）
Outlet Port	G 1” （HPH50~81） G 1-1/4” （HPH100）

HPH 50~100 Flow Rate/Pressure Curve

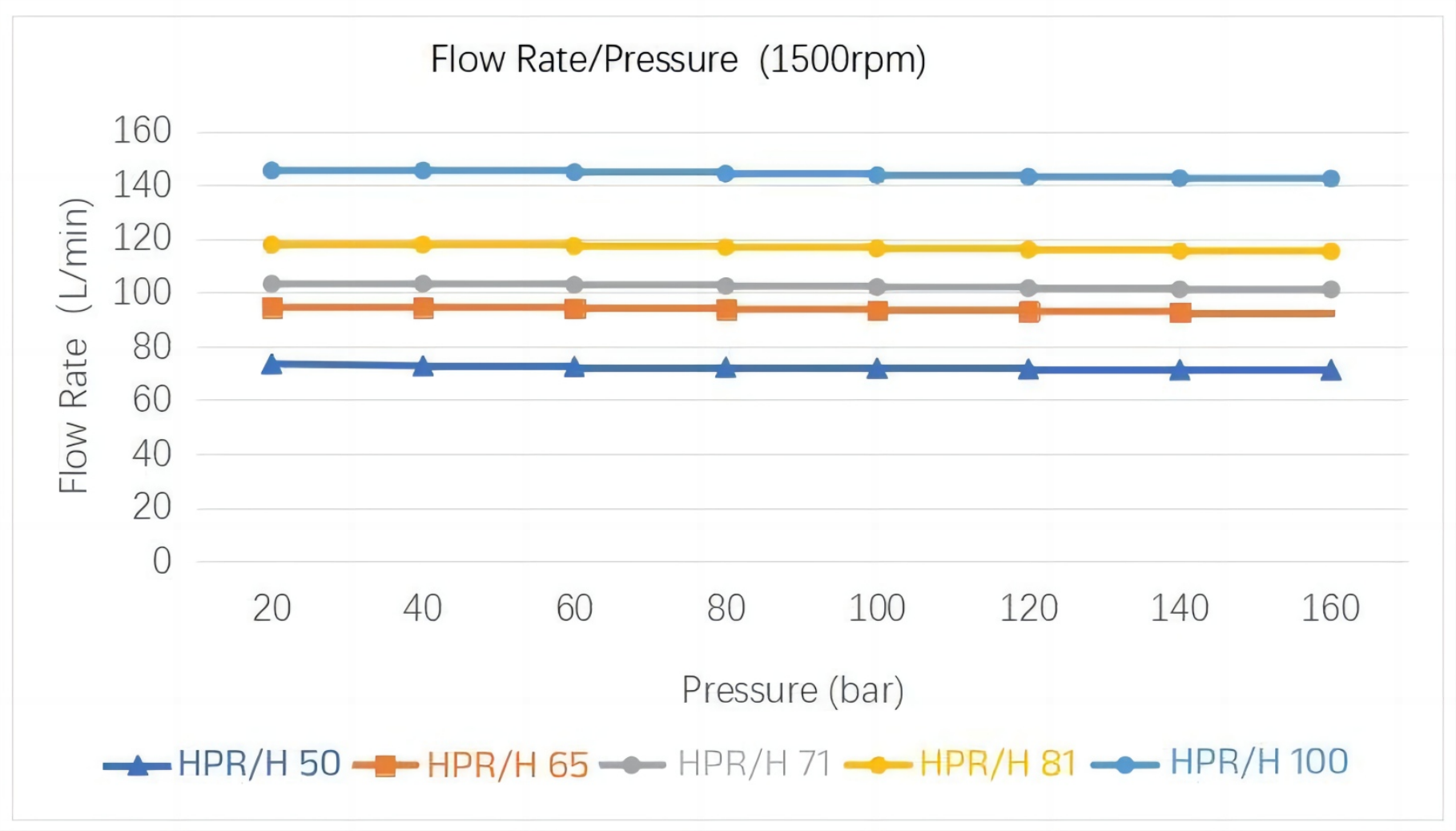

HPH 50~100 Flow Rate/Speed Curve

