Axial Piston
High Pressure Pump
For Tap Water

HPH **8~12.5**

THINKTANK







Specification 8~12.5

Pumps Model	8	10	11.5	12.5
Displacement (cc/rev)	8	10	11.5	12.5
Housing Material	ASTM 304 / ASTM 316L			
Min. Outlet Pressure (barg)	30			
Max. Outlet Pressure (barg)	160			
Inlet Pressure,Continuous (barg)	0.1-5			
Min. Speed,Continuous (rpm)	700			
Max. Speed (rpm)	3000	3000	3000	3000
Flow Rate (L/min) (16Mpa,700 rpm)	5	6.3	7.2	7.9
Flow Rate (L/min) (16Mpa,1000 rpm)	7.2	9.1	10.4	11.4
Flow Rate (L/min) (16Mpa,1500 rpm)	11.0	13.8	15.8	17.3
Flow Rate (L/min) (16Mpa,2000 rpm)	14.8	18.6	21.4	23.3
Flow Rate (L/min) (16Mpa,3000 rpm)	22.8	28.5	32.8	35.6
Power Consumption (KW) (16Mpa,1500 rpm)	3.4	4.2	4.9	5.3
Min. Media Temperature (°C)	2			
Max. Media Temperature (°C)	50			
Sound Pressure Level (dB) *	76	76	76	76
Weight (kg)	8.6	8.6	8.6	8.6
Integrated Flush Valve	YES			

* Sound Pressure Level: Calculated according to EN ISO 3744: 2010 / dB(A) [LPA, 1m], when driven by a motor and operating at maximum working pressure and speed.

Installation Dimensions (HPH 8~12.5)

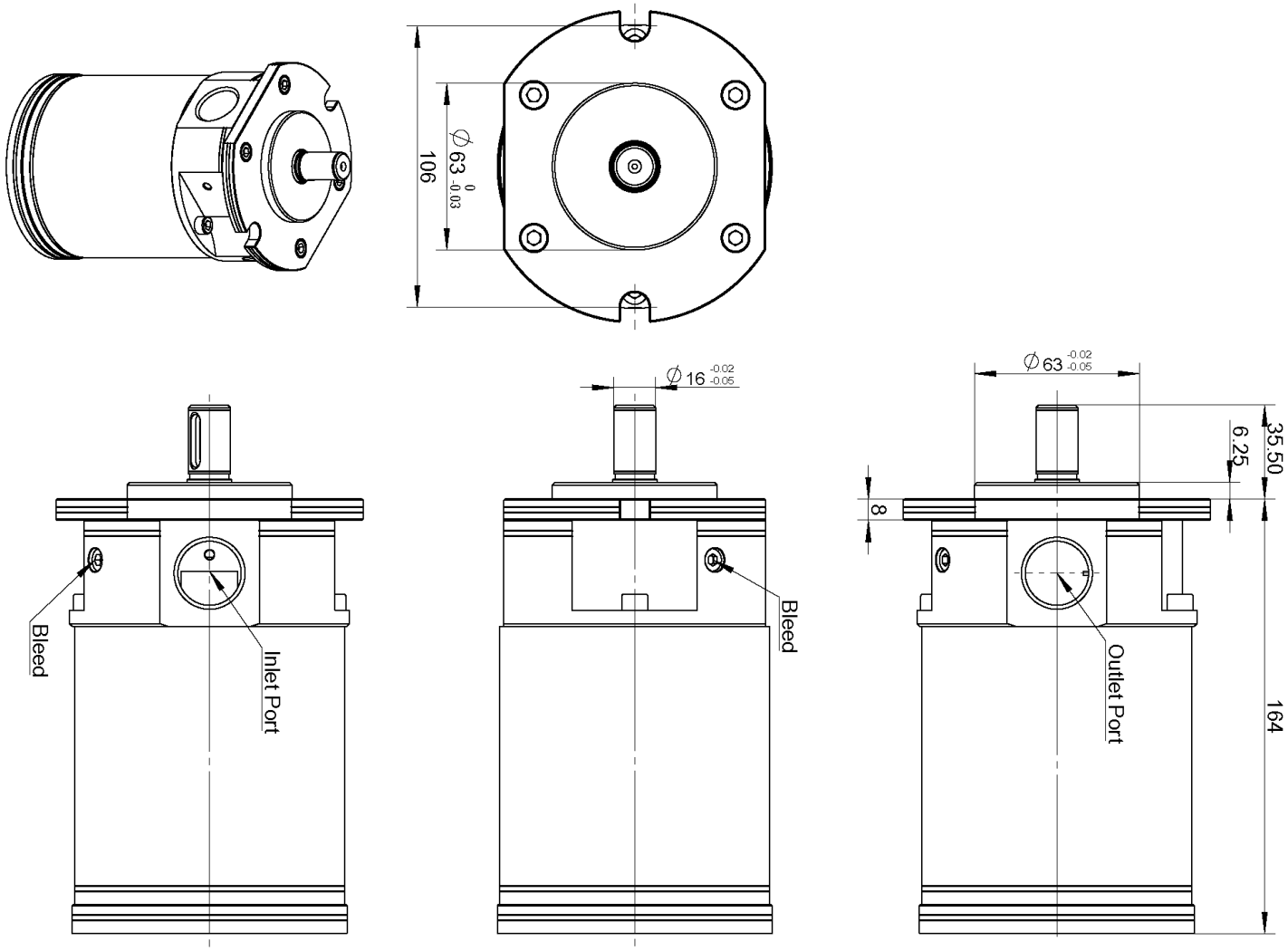

Parallel key	**5*5*20（DIN6885）**
Bleed	**M5*12**
Inlet Port	**G 3/4”（T Port）**
Outlet Port	**G 3/4”（P Port）**

HPH 8~12.5 Flow Rate/Pressure Curve

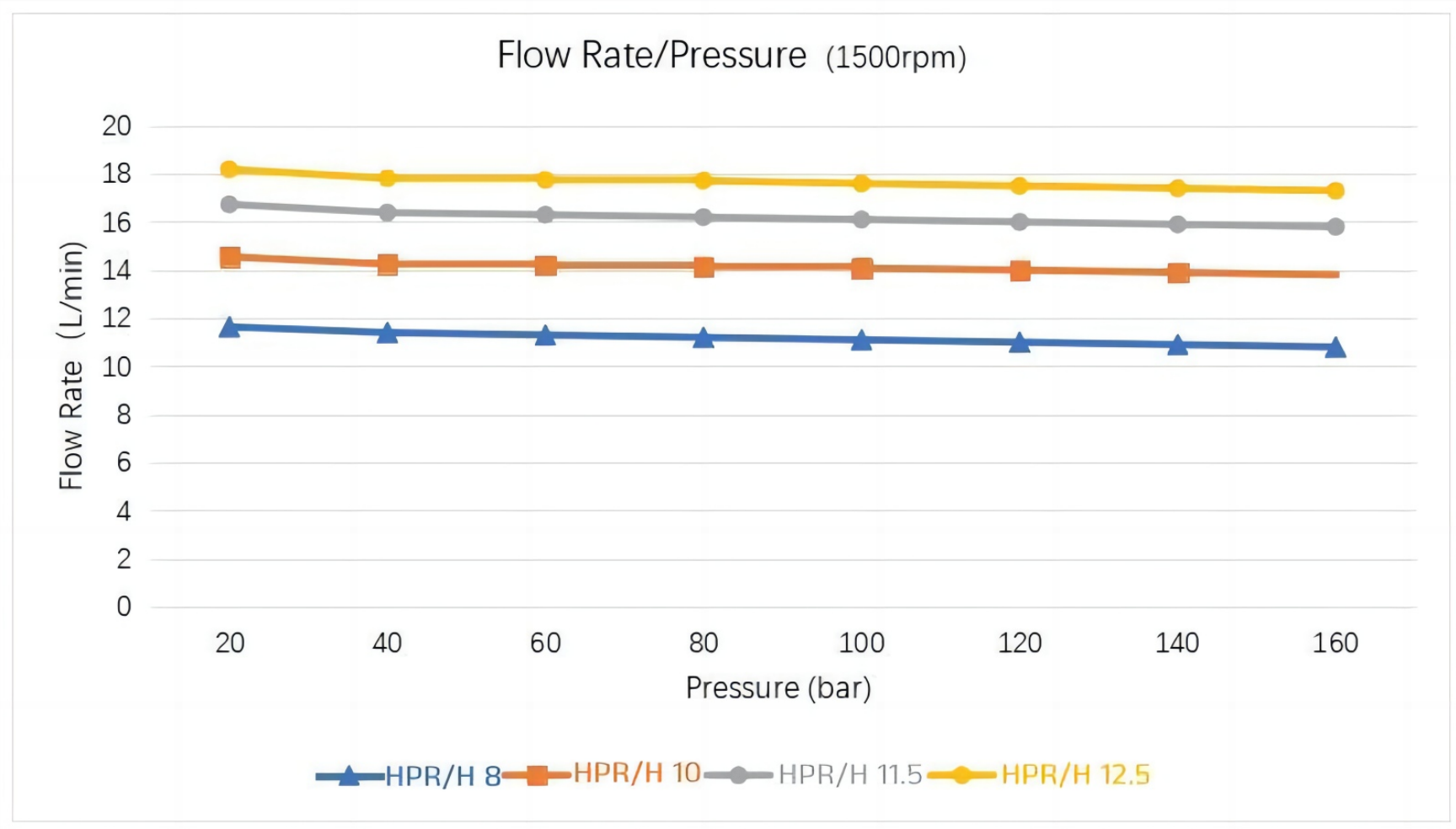

HPH 8~12.5 Flow Rate/Speed Curve

